3-Sided Frame - Paired

QTY	MARK NUMBER	SWING	DIMENSIONS WIDTH(IN)	DIMENSIONS HEIGHT(IN)	LABEL MINUTES
					None
					None
					None
					None
					None
					None
					None
					None
					None

Material: A40 *

Construction: Face Weld *

Gauge: 16G *

All fields marked with an asterisk are prepopulated to DCI standards.

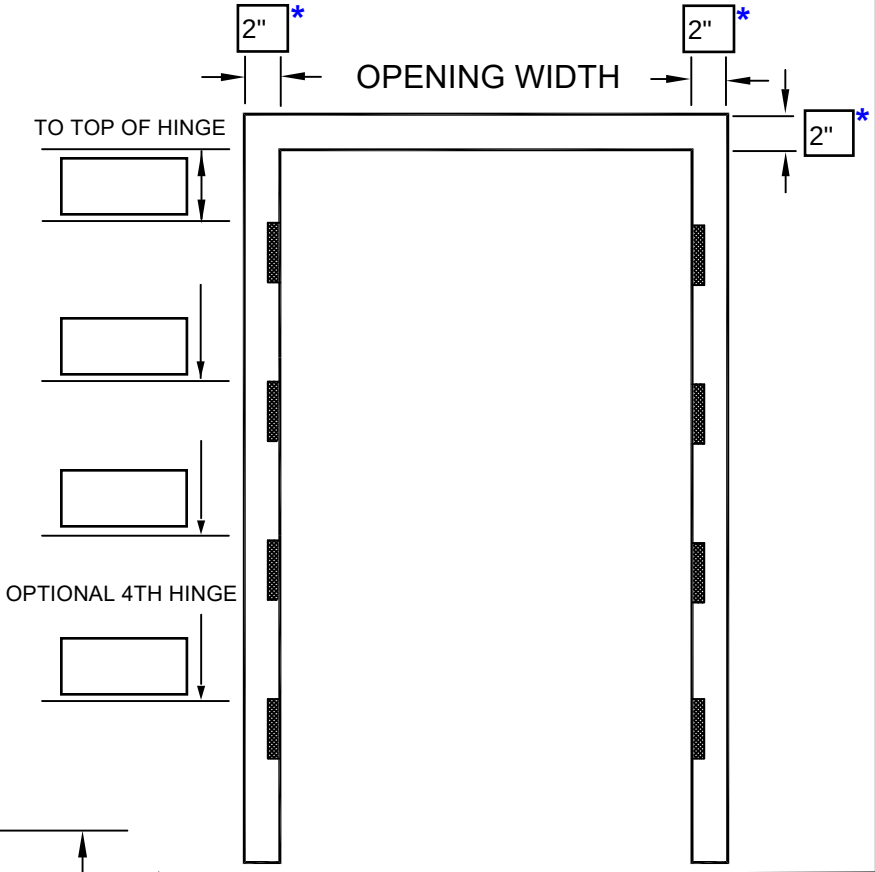

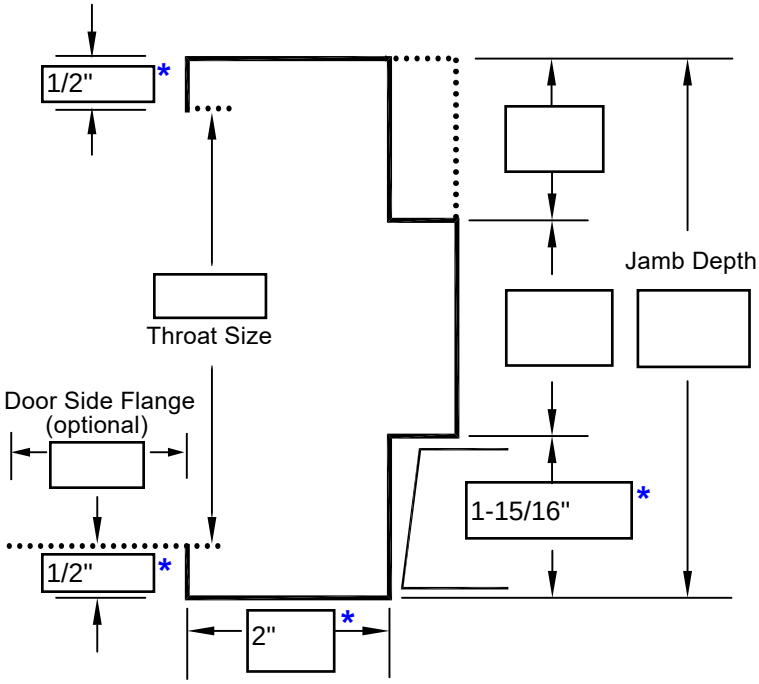

HINGE LOCATIONS: New DCI * BACKSET: 11/32 *

HINGE TYPE: 4.5" *

HINGE DETAILS:

STD WEIGHT ◉

HEAVY WEIGHT ○

STRIKE TYPE: Other (note below)

STRIKE DETAILS:

SILENCERS: ☐

NOTE: All frames include door closer reinforcement.
All welded frames include A4 standard base anchors.

OTHER DETAILS:

ANCHOR TYPE:

For a full description of all DCI anchor types, please refer to our **Technical Data Manual**.

All stud anchors will be spaced for 5/8" wall board penetration unless otherwise noted

HOLLOW METAL ON DEMAND

www.dcihollowmetal.com

COMPANY NAME :

PO NUMBER :

JOB NAME :

PAGE

OF

3-Sided Frame - Paired

QTY	MARK NUMBER	SWING	DIMENSIONS WIDTH(IN)	DIMENSIONS HEIGHT(IN)	LABEL MINUTES
					None
					None
					None
					None
					None
					None
					None
					None
					None
					None

Material: A40 *

Construction: Face Weld *

Gauge: 16G *

All fields marked with an asterisk are prepopulated to DCI standards.

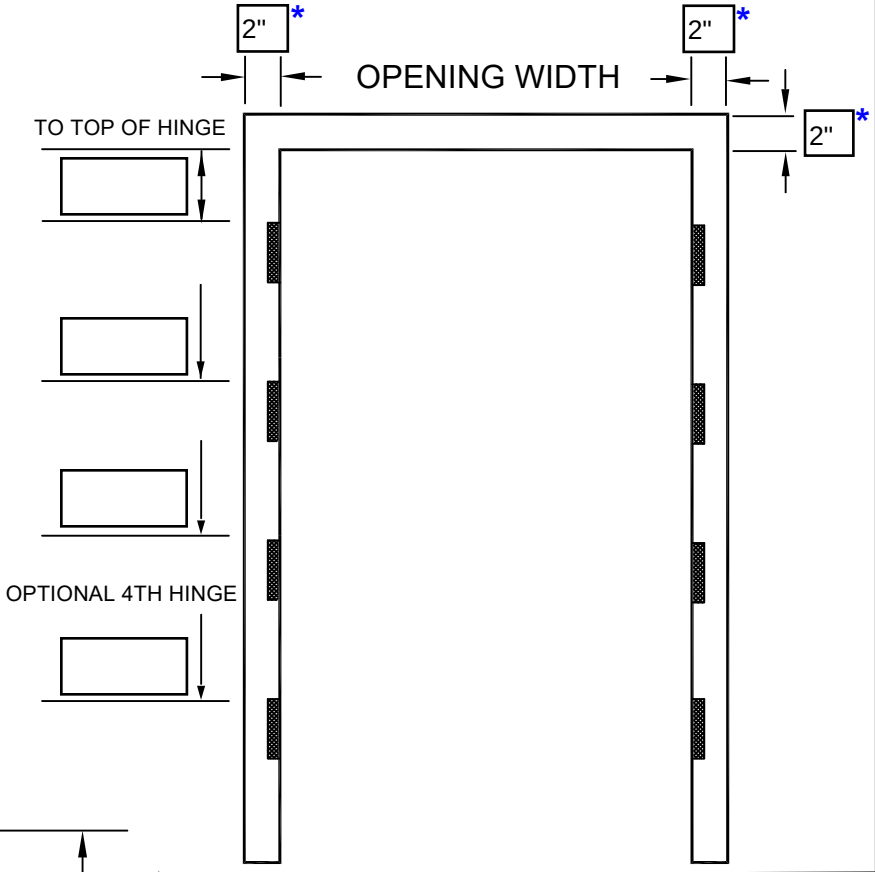

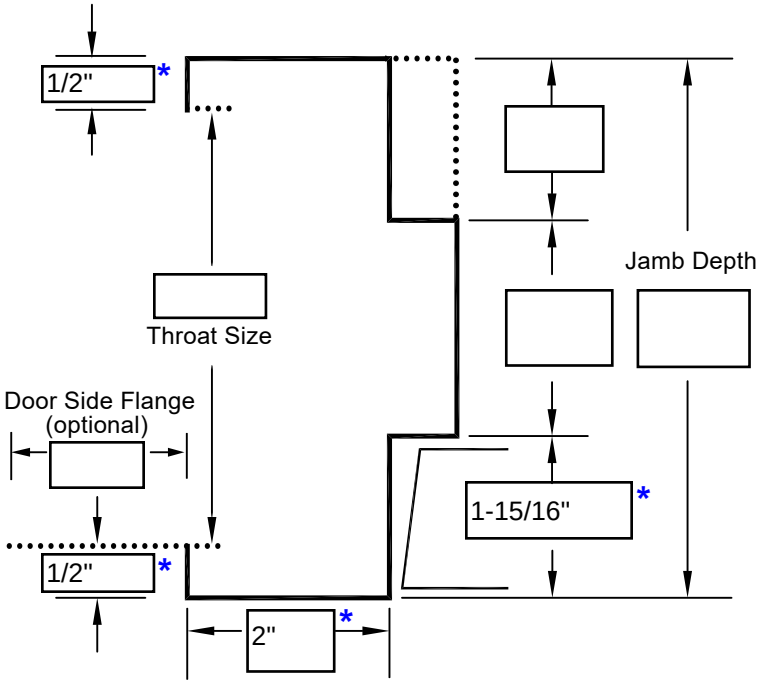

HINGE LOCATIONS: New DCI * BACKSET: 11/32 *

HINGE TYPE: 4.5" *

HINGE DETAILS:

STD WEIGHT ◉

HEAVY WEIGHT ○

STRIKE TYPE: Other (note below)

STRIKE DETAILS:

SILENCERS:

NOTE: All frames include door closer reinforcement.
All welded frames include A4 standard base anchors.

OTHER DETAILS:

ANCHOR TYPE:

For a full description of all DCI anchor types, please refer to our **Technical Data Manual**.

All stud anchors will be spaced for 5/8" wall board penetration unless otherwise noted

HOLLOW METAL ON DEMAND

www.dcihollowmetal.com

COMPANY NAME :

PO NUMBER :

JOB NAME :

PAGE

OF

3-Sided Frame - Paired

QTY	MARK NUMBER	SWING	DIMENSIONS WIDTH(IN)	DIMENSIONS HEIGHT(IN)	LABEL MINUTES
					None
					None
					None
					None
					None
					None
					None
					None
					None

Material: A40 *

Construction: Face Weld *

Gauge: 16G *

All fields marked with an asterisk are prepopulated to DCI standards.

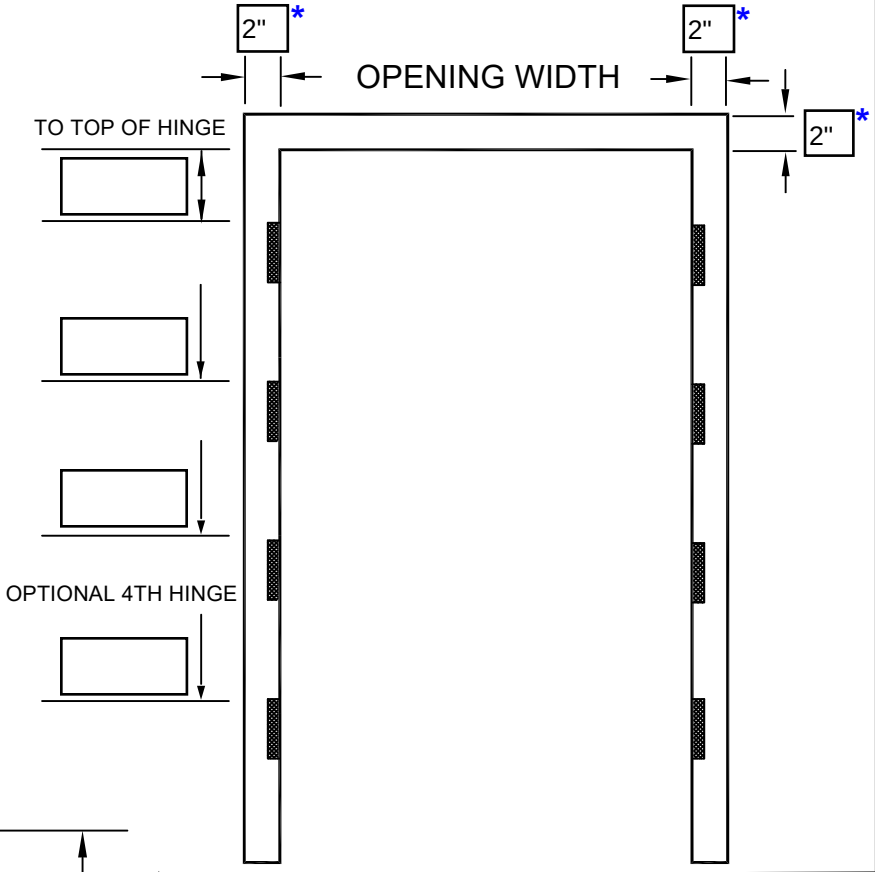

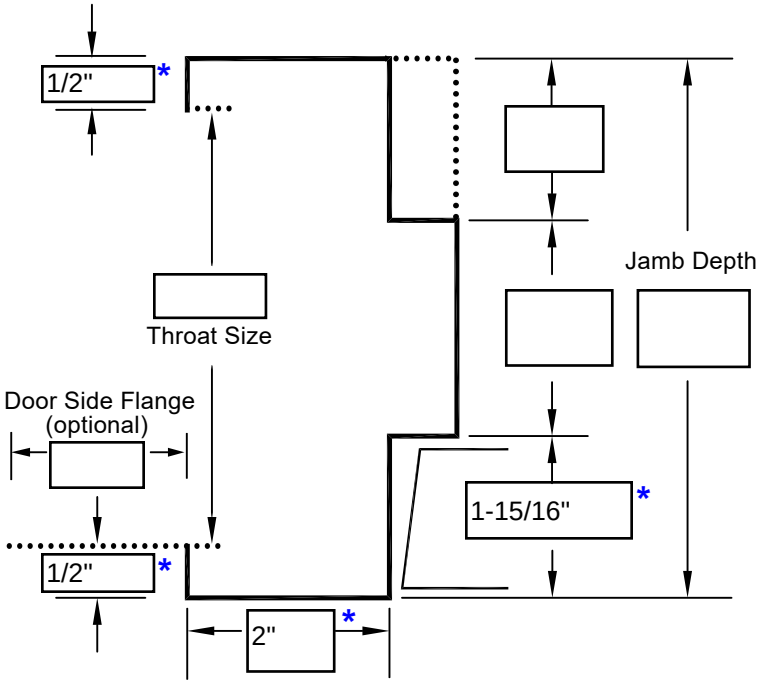

HINGE LOCATIONS: New DCI * BACKSET: 11/32 *

HINGE TYPE: 4.5" *

HINGE DETAILS:

STD WEIGHT ◉

HEAVY WEIGHT ○

STRIKE TYPE: Other (note below)

STRIKE DETAILS:

SILENCERS:

NOTE: All frames include door closer reinforcement.
All welded frames include A4 standard base anchors.

OTHER DETAILS:

ANCHOR TYPE:

For a full description of all DCI anchor types, please refer to our **Technical Data Manual**.

All stud anchors will be spaced for 5/8" wall board penetration unless otherwise noted

HOLLOW METAL ON DEMAND

www.dcihollowmetal.com

COMPANY NAME :

PO NUMBER :

JOB NAME :

PAGE

OF